Note:
1.Do Not Scale Drawings,Use Figured Dimensions Only;
2. This drawing is valid only if with corresponding edition stamp.

1*5

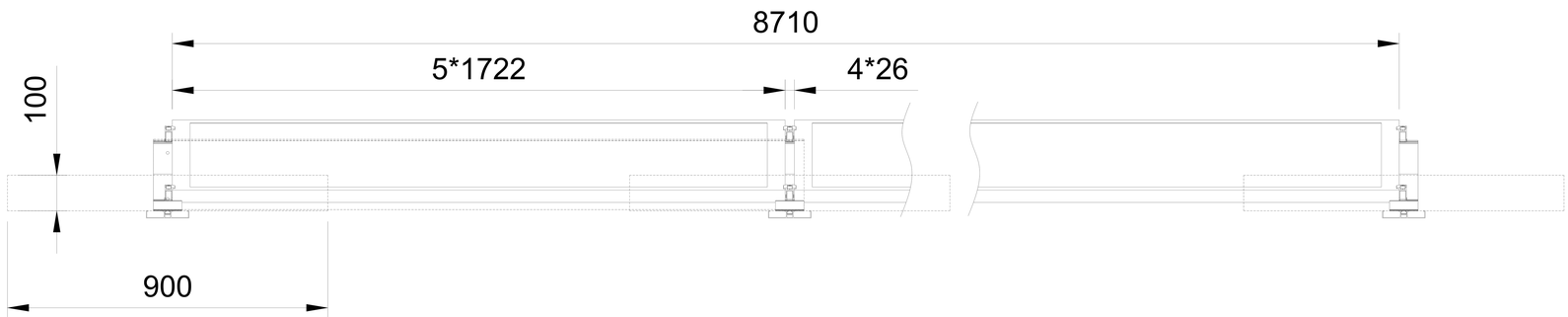

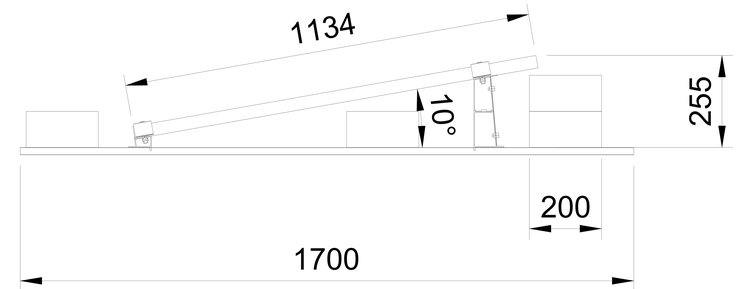

Item	Part No.	Part Name	Spec.	Qty	Weight:kg	Material	Remark
8	HQ-HB-M8*10	inner hexagon bolts M8*10	M8*10	24		8.8级	
7	HQ-TB-M8*15*	T-bolts M8*15	M8*15	12		8.8级	
6	HQ-BP-1200	Bottom Rail	L1700	6		AL-6005-T5	
5	HQ-WS-1828	Wind Shield	L1828	5		Magnesium-aluminum-zinc plate	
4	HQ-IC03-35*	Inter Clamp Kit 35mm	L50	8		AL-6005-T5	
3	HQ-EC03-35	End Clamp Kit 35mm	L50	4		AL-6005-T5	
2	HQ-RS-80	Rear Support assembly	L80	6		AL-6005-T5	
1	HQ-FS-80	Front Support	L80	6		AL-6005-T5	

Tilt angle(°):	10
Wind Speed（m/s):	35m/s
Snow Load (cm):	1.26KN/m²
Module (mm):	1722*1134*30
Rows*Columns(PCS):	1*5

hqmount 虎克（厦门）新材料有限公司
Xiamen HQ Mount Tech. Co.,Ltd.

Group	BR4	Title	匈牙利压载项目	BarCode	****
Dwg No.	HQ202307050202	Scale	1:1	Total page 1 pages the 1	View
				Revision	V1.0 A3